Corporate Organization Chart
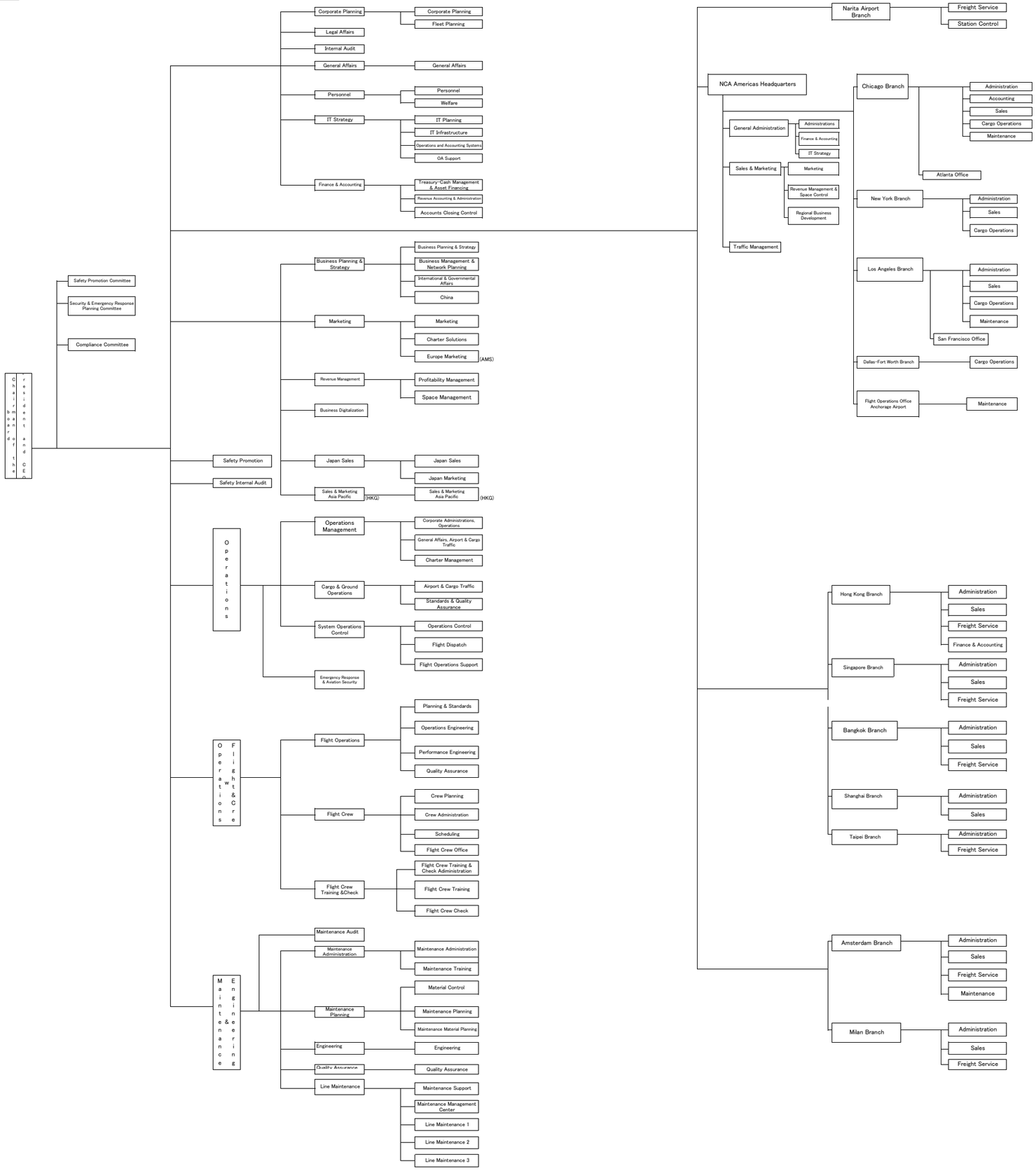
As of Dec. 1.2023